Promoting interdisciplinarity with engineering students

Konstantinos Katzis[*], George Christou[*], Areti Chouchourelou[+]

[*] Department of Computer Science and Engineering, School of Sciences, European University Cyprus, 6 Diogenous Street, 2404, Nicosia, Cyprus
[+] Department of Social and Behavioural Sciences, School of Humanities and Social Sciences, European University Cyprus, 6 Diogenous Street, 2404, Nicosia, Cyprus

Email: K.Katzis@euc.ac.cy, G.Christou@euc.ac.cy, A.Chouchourelou@euc.ac.cy

Abstract

Three interdisciplinary projects were assigned to three groups of 4th year undergraduate students studying Computer Engineering and Computer Science. Each group was required to design, implement and test a new system in collaboration with at least one of the following Departments: Psychology, Physiotherapy and Arts. Students participating in these projects had the opportunity to exchange ideas with students from other disciplines to finalise their system requirements. This paper presents the findings of a research conducted regarding the promotion of interdisciplinary project practices in engineering in order to provide students with real life challenges. The results of our survey-based methodology depicted that the majority of the students appreciated the nature and the importance of the interdisciplinary projects stating that they helped them to further develop their academic and research skills as well as their interpersonal abilities. These projects encouraged the engineers to look into other fields and seek support from students from other disciplines just like in real life.

Keywords: interdisciplinary engineering projects; project based learning; learning in groups

1 Introduction

After university students learn the basics in their chosen track of study, they are ready to take on more interesting challenges. These challenges should be closer to the real projects that students will face when they become employed. However, to provide such new challenges, a teacher needs to address more than the class homework will allow, but less than a full-blown industry project. Project-based learning (PjBL) allows a simulation of the deadline-driven world of industry projects, but in the safety of the classroom, where failure is not absolutely catastrophic; rather it is an efficient learning mechanism. Mills and Treagust (Mills & Treagust, 2003) pointed out that PjBL can create problems such as the time and effort required from the engineering students to implement the project as well as problems regarding interpersonal conflicts between the team.

We decided to use the PjBL approach in three projects that were given out to two of our courses. The first project was the building of a computer game that would use a new interaction technique for players to play the game, the XBOX Kinect (Microsoft, 2013). This was given as a full semester project in "CSC 391 – Digital Game Design" course. The second project was the creation of part of the mechanism of a digital art project, where emotional changes sensed using a Galvanic Skin Response (GSR) sensor were turned into a visual digital art display. The third project involved the students' building of a checkers simulation where the turns were decided again using a GSR sensor. Our goals with all the projects were to simulate a fast-paced, deadline-driven environment, and to leverage interdisciplinary requirements that would force students to work with other students, outside of their major. The second and third projects were given in "ECE 416 – Computer Engineering Design".

Because this was the first application of PjBL in our department, we wanted to gauge the reaction of our students towards this new type of teaching, as well as examine how students would behave in a group setting. The group sizes that we used for the projects were slightly larger than the group size that students are used to in their other courses, thus making the aforementioned courses the students' first introduction into large-group projects.

We found that through the three projects, our students enjoyed working through their project, and most felt that they received knowledge that could not have been attained otherwise, such as learning how to cope when confronted with a rigid deadline, all the while working in a team where everything is not dependant on one person. Our students also found that this way of learning is more fun than traditional lecturing, and said that they had fun while working on their projects. In the rest of the paper we describe the projects that our students worked on, and the method we used to gauge their ideas and motivations while working in groups on their assigned projects.

2 Background

PjBL is another way of motivating students to learn more than they would through traditional lectures and assignments alone (Blumenfeld et al., 1991). It provides students with complex task-based problems, often interdisciplinary and requires them to follow a systematic approach to solve them. PjBL approach increases students' awareness of the importance and necessity of analysis for finding optimal solutions for their problems. This approach supplies students with hands-on authentic experiences throughout the whole process. Project methods and their educational benefits can be traced back to Dewey's concept of 'complete act of thought' in 1910, which promoted through teaching strategies and helped students actively engage in learning about topics of their lives (J. S. Krajcik, Czerniak, & Berger, 2003). In (Kilpatrick, 1918) emphasis has been given on authenticity and autonomy in learning. Also in 1949, Tyler (Tyler, 1949) stated that 'Learning takes place through the active behaviour of the student, it is what he does that he learns, not what the teacher does.' Based on this concept numerous projects have been implemented; some in engineering related areas and some in other areas; some in secondary education and some in higher education.

For this work, we have focused in cases related to higher education. More specifically, in (Frank, Lavy, & Elata, 2003), perceptions and attitudes of freshmen students that have participated in an introductory course in engineering projects have been examined. A number of teams of students carried out mini-projects that required the design and construction of devices that perform pre-defined tasks. Results from the interviews presented in (Frank, et al., 2003) indicated that several students thought that PjBL improved their ability to think especially in regards to problem solving. In addition it has been noted that project-based learning essentially allowed adjusting the rate and the level of learning to the individual according to his/her abilities. It has also been concluded that students felt that the course developed their engineering thinking and their intuition. In addition it has increased their motivation to study. All these have been achieved at permitted rate and level of progress according to the needs of each team while students felt that they were responsible for the learning process.

Similar findings can be found in older literature such as Green (Green, 1998) who indicated that PjBL increases motivation to study. He also noted that PjBL increases motivation and gives the students a sense of satisfaction. PjBL is also helpful for developing long-term learning skills. Krajcik et al. (1999) suggest that PjBL develops deep, integrated understanding of content and process followed to the students involved. In addition, it promotes joint work and cultivates social skills through collaborative work. Furthermore, it promotes responsibility and independent learning since everyone is responsible for the part of work allocated; yet he/she is responsible to deliver the outcome on time for the others to integrate.

Benefits from employing PjBL can also be found in (de los Ríosam, Cazorlaa, Díaz-Puentea, & Yagüea, 2010) where educational methodology of cooperative project-based learning has been investigated. This has been a 20 year long work that was based on cooperation, active participation and interaction, offering multiple possibilities for developing technical, contextual and behavioural competences. Results from this work showed that this methodology facilitated training in technical, personal, and contextual competences. Students were given real problems to deal with and collaborative learning has been achieved by integrating teaching and research together in an entire educational strategy for undergraduate and graduate programmes through PjBL.

As stated above, the benefits of PjBL can be great if applied in a well-defined way. According to Adderley et al. (Adderley et al., 1975), PjBL is based on the following points:

- Solution of a problem is required, though not necessary set by the student.
- Initiative by the student or group of students is important, and necessitates a variety of educational activities.
- An end-product such as a report, computer program or a model is the end result.
- Duration of the project must be for a considerable amount of time.

For this work, the following points have been addressed while the concept of interdisciplinarity has been introduced allowing further interaction of our students with topics from other areas and people from other departments.

3 Interdisciplinary Engineering Projects

As part of incorporating a PjBL approach in our current Computer Engineering program, a number of students have been assigned to work in groups to solve challenging problems that are new, unique and novel while engaging interdisciplinary. Students were left to decide how to get into teams and what sort of approach they should follow to solve the problem while they have been advised on general project management techniques such as how to gather information, analyse it, and derive knowledge from it. Their learning has been on a collaborative basis requiring them

to use their communication skills and receive or transfer this information. At the end, students have demonstrated their achievement and have been judged based on the final product as well as their documentation.

As part of this educational approach, three interdisciplinary projects were assigned to three groups of 4th year undergraduate students studying Computer Engineering and Computer Science. Each group was required to design, implement and test a new system in collaboration with at least one of the following Departments: Psychology, Physiotherapy and Arts. Their work also involved conducting a series of trials with random people examining their behaviour while testing their product. Students participating in these projects had the opportunity to exchange ideas with students from other disciplines to finalise their system requirements.

3.1 The Dark Chamber of Emotions: A Visualization of Emotional States

The Dark Chamber of Emotions (DCoE) is a highly interdisciplinary project that aimed to introduce a novel approach in depicting changes in emotions of participants in a digital art display when exposed to various familiar and unfamiliar sounds. Students were required to specify the requirements, design, implement and test a complex system. To test their system, the students involved gathered a number of participants that were individually positioned within a Dark Chamber and stimulated with sounds coming from various directions. Emotions have been monitored for changes using a galvanized skin response (GSR) sensor. More specifically, the GSR recorded any sort of body changes and sent them to an Arduino microprocessor unit which then relayed the data to a PC. The data was processed on the PC and the emotions were classified and displayed on a screen in a colorful way. The chamber was also equipped with air-fans that had variable revolutions per minute (RPM) depending on the input from the GSR sensors and the temperature of DCoE. The fans were controlled by the Arduino microprocessor unit and their purpose was to maintain a constant temperature inside the DCoE. Furthermore, DCoE was also equipped with two infra-red cameras that record the user during the experience and record the user's facial expressions.

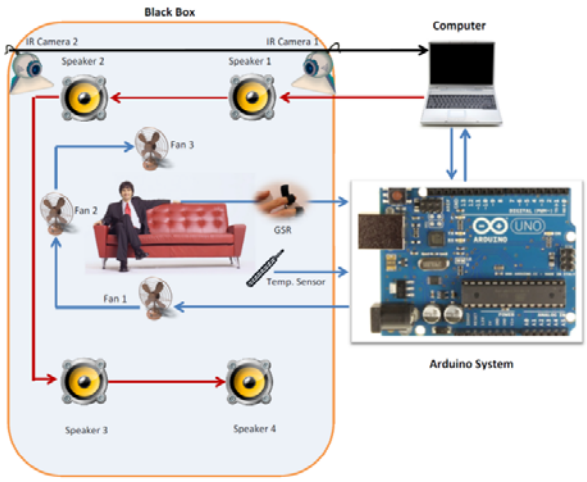

Figure 1: Views of the Technical University of Eindhoven, the Netherlands

This project combined topics form electronic engineering, computer science, psychology and arts. The students involved carrying out this project were 4th year Computer Engineering students.

3.2 Emotional Checkers

In this project, students were required to design, build and implement a checker table that two players could play with using their body electrical chargers measured by a Galvanic Skin Response (GSR) sensor for making up their decisions. Each player effectively placed a piece at a position that was picked through an algorithm that took into account their emotional state. The game was won when all pieces were placed in a particular area. The two participants should "coerce" certain emotions to stop the other player from moving to a desirable position. The 64 positions of the checker board were equipped with a grid of 8x8 LEDs that were fitted on the board and / or an LCD screen that indicated the position of the piece (e.g. Row:2, Column:8). Students involved in this project developed a set of galvanic skin sensors. The sensors were connected to an Arduino platform that was programmed to process the input and then make a decision on the next movement of the player. According to the player's skin electric charges, the arduino indicated which place on the board the user was to position the piece. The Arduino was programmed with different

game modes such as Calm Mode, Angry Mode and Random Mode. The modes were selected using a 3 button navigation panel (up/down/select).

3.3 Video Game Project

The third project involved building a computer game that would be controlled through the XBOX Kinect sensor (Microsoft, 2013). This sensor allows the programmer to capture a user's movements, without requiring the user to hold any appliances, such as the Wii (Nintendo, 2013) or the PS3 Move (Sony, 2013). Kinect uses two cameras, a regular webcam and an InfraRed (IR) camera that allow accurate understanding of the space that they capture. The students were required to use the Kinect to create a game whose avatar would be controlled by movements that were designed by physical therapists. The physical therapists would then use the game to motivate children with cerebral palsy to perform the required movements to play the game. These movements however, were designed to rehabilitate the children who were playing the game.

The students were given free choice as to what type of game they would create, as long as they adhered to the aforementioned conditions set by the physical therapist who oversaw the team. They decided to build a side-scrolling platform game, where the hero is searching for a hidden Mayan treasure. The avatar would move and throw projectiles by using the specific movements that were decided by the physical therapy instructor who collaborated with the team. Hence, the students had a very specific task ahead of them.

4 Research Methodology and Survey Results

To examine whether students felt comfortable with our PjBL approach to their courses, we created a questionnaire that consisted of two parts: a multiple-choice question part, with 5 questions, and an open-ended question part, with 10 questions. The questionnaire was used to explore our initial questions; namely how did the students feel about PjBL, and about working in an extended team setting. Thus the questionnaire aimed to capture information on the collaboration and integration of the individual student within their team, along with the benefits they gained conducting these projects.

In the design of the questionnaire we distinguished between individual, team, and project interaction in order to measure the level of experience that students were exposed to. The questionnaire specifically inquired students to comment on their personal experience in terms of the difficulty of the work done, the resources required, their involvement in the group, their impression of working with others and of course their impression of conducting a project that required them to look into topics other than their discipline. The questionnaire was handed to all students on the final day of the academic term (January 2013). A total number of fifteen (15) students completed and returned the questionnaire providing relevant information regarding their experience. Once all information was collected, both qualitative and quantitative analyses were conducted. The questions of the questionnaire are shown in Table 1.

4.1 Multiple choice questions

The first part of the questionnaire involved 5 multiple choice questions aiming to measure the level of interaction in the group. The results show that all of the students felt that their groups worked well together, with two thirds answering that their groups worked exceptionally well. The students all answered that they enjoyed working on the project as a method for learning, with almost three quarters of the students stating that they "loved it". From the answers it was also obvious that the students were meeting outside of the classroom to achieve the completion of the project, something which was a desired effect. The students met on average twice per week outside of the classroom.

Table 1 Questions used in the Questionnaire

Multiple Choice Questions	Open-Ended Questions
How well did your group work together?	What did you learn from this course?
How much did you enjoy this project as a way of learning the material?	What is the difference between this course and other undergraduate courses.
Did you meet outside of class with your group? (If yes, how often weekly?)	Did you enjoy working in groups? Why or why not?
How much do you think you contributed to your group project?	Did this project help you to better understand the material? Why or why not?

Do you feel the other members of your group contributed as much as they should have?	Do you feel like you were an important part of the group? Why or why not?
	How do you think you were able to help contribute to the group dynamics and keep group members working well together?
	Explain how well your group worked together and how this will help you manage group projects in the future.
	Are there any members of your group that deserve special recognition for going above and beyond to make the group project successful? (Do not specify names)
	Are there any members that did not participate and you feel hindered the group's ability to be successful? (Do not specify names)
	How do you think that your group best demonstrated the concepts discussed in the project description?

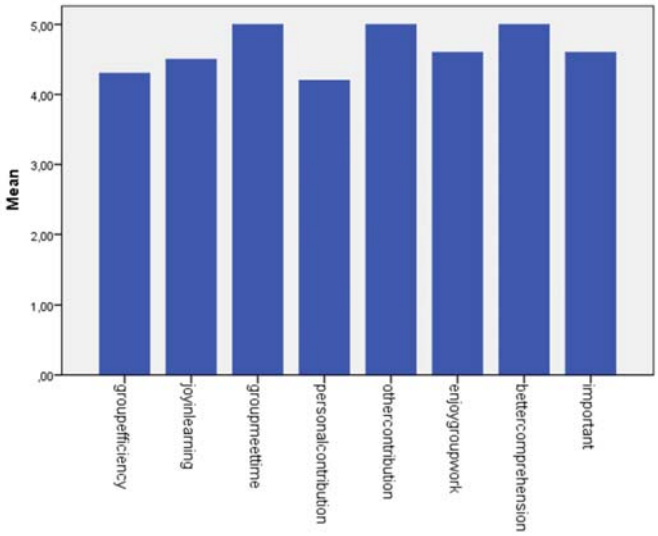

Figure 2 Average ratings of the students-participants for the main variables in the exploratory questionnaires. The ratings are represented on a scale from 1 –"not at all"- to 5-"extremely"-.

When asked how much effort they put in their project, 55% of the students answered that they invested "a reasonable amount of time and effort", while 36% stated that they invested "a huge amount of time and effort". This shows that maybe the projects were indeed interesting to the students, because otherwise the students would not have expended so much time and effort on them. Finally, it seemed that all students rose to the challenge of working and contributing towards the project, because all students answered positively when asked whether they felt that their group-mates contributed as much as they should have. A summary of the results can be found in Figure 2. Students overall felt their group was efficient, they enjoyed learning within it, that they met a lot outside school, that both themselves and the others contributed, that the group encouraged their joy in learning and that their personal role in the group was important.

4.2 Open ended questions

The second part of the questionnaire involved 10 open-ended questions aiming to examine the individual experience of the students as well as the team dynamics. The first question aimed to examine whether the students could summarize their learning experience in a few sentences. Most students answered in similar terms stating that the purpose of this course was to familiarize students with research and development, to introduce them to group work,

and to put them through the process of creating and building a project based on a list of requirements. A few students answered with more specific answers such as to build a video game that would motivate children with cerebral palsy rehabilitation. The students' answers revealed that our course goals were understood by the students.

The second open-ended question aimed to examine whether students felt that the PjBL courses were different in structure and style from their other, lecture-based courses. To our delight, many of the students felt that the difference was that the PjBL courses were more fun! However, they also found that the courses were more complex than their lecture-based courses, both in terms of workload and that project course combines both theory and practice by applying everything they learned so far. They also answered that PjBL courses taught them how to carry out a real project and they felt that these courses are more practical than their lecture-based courses so far. Finally, one of the answers that stood out stated that they were taught many things that other courses did not teach them such as teamwork and project life-cycle. The students' answers showed that the PjBL methodology carries with it more than just traditional academic knowledge. Most importantly though, this extra knowledge that cannot be taught in a traditional classroom environment is felt and understood by those that need to receive it the most: the students.

In the question "*Did you enjoy working in groups? Why or why not?*" almost all students answered that they enjoyed working in groups because of sharing their ideas, problems and opinions, they were assigned small scale tasks and they had fun working in groups. Only one student answered negatively stating that he/she preferred to work alone. The answer of this one student could be construed as an outlier and easily dismissed, but the reality is that not all students will find PjBL to be something they like. This is a problem that needs to be faced effectively by any educator who wants to apply this methodology to his/her teaching. Our literature search did not find the answer to this problem, thus we believe it to be an open question that requires an answer.

In the question "*Did you better understand the material through this project? Why or why not?*" all students answered positively. Some commented that they understood the material because of the fact that the courses combined both theory and practice, and others because they had to solve issues that came up through group work and relying less on the help of the instructor. While we encouraged our students to bring their questions to us, we found that they only came to us once they had depleted any resources they could afford through group discussions. We also found that students came to us with proposed solutions instead of coming to us only with questions. We feel that this is again, one major side-effect of the PjBL methodology, because by having students work in groups towards the completion of a project, they immediately have soundboards where they can bounce ideas and come up with solutions without being afraid of saying something that is wrong to their instructors.

The next five questions dealt with the group dynamics. In the question "*Do you feel like you were an important member of the group? Why or why not?"* all students but one answered positively stating that all group members were important, with some saying that their part was vital for the operation of their project. Only one answered negatively stating that his/her work could be carried out by anyone. However, in the next question "*How do you think you were able to help contribute to the group dynamics and keep group members working well together?*" some students answered that their group worked well since they were all friends beforehand, some answered that they occasionally help other group members and by understanding each other. The fact that the person who answered negatively in the "important member of the group" question felt that he/she was able to contribute towards the group's goals shows that he/she was immersed in the group methodology as well. Still, the problem of convincing some students that group work is a viable tool for learning more than just academic knowledge about a topic is a challenge as identified in a previous question analysis.

In the question "*Explain how well your group worked together and how this will help you in managing future group projects*" most students answered that their group worked really well. However, some of the students stated that they were not bossy enough and that if everyone worked equally the result would have been better. Furthermore, some students answered that this experience will help them manage their group projects in the future since they learn how small scale team projects require group coordination. This answer shows that there needs to be a designated leader in a group that has the authority to push, motivate, and even sanction group members who do not perform up to group standards. The concept of sanctions is important in any social environment (i.e. (Christou, 2011)). However, it is not clear how to allow sanctioning mechanisms in the PjBL methodology. Again, here we posit that this is an open topic that requires an answer.

Finally, we wanted to examine whether students would recognize effort as well as non-effort in their groups. Thus, two questions were asked towards this. For the first, "*Are there any members of your group that deserve special recognition? (Do not specify names)*" 64% answered positively. On the contrary, for the question "*Are there any members that did not participate thus affecting the group's ability to be successful*? (Do not specify names)", most students answered negatively with only one stating that there could be such a case and another stating that there was

a team member that did not participate well enough". We speculate that students are eager to give praise, but are more reserved when recognizing that some of the group members do not put as much effort as the rest. This creates a problem in the correct evaluation of students that work in groups. We also speculate that this could be a cultural difference between the students that participated in our courses, and students from other countries. Again, this is an open question that needs to be examined.

5 Conclusion and future work

We have presented the case of two courses that we taught using for the first time the PjBL paradigm. Through those courses we examined two questions: how would our students react towards this new type of teaching, and how would our students behave in a group setting. We found that our students were responsive towards the new type of teaching, embracing it and trying to make the most out of this learning experience. We also identified issues and challenges that in our opinion require answers if this method is applied in a larger scale, at least to our courses.

More specifically, the results of our study depicted that the majority of our students appreciated the nature and the importance of the interdisciplinary projects stating that they helped them to further developed their academic and research skills as well as their interpersonal abilities. These projects pushed the engineers to look into other fields and seek support from both students and instructors from other disciplines as they would have done in real life. Interacting with people from other disciplines gave them the chance to practice their skills in communicating the requirements of their project, and receiving feedback towards the improvement of their designs. Furthermore, the students had the opportunity to experience group work through a 6-month project with regular weekly meetings. Most of the students enjoyed working in groups but a few have expressed their wish to work by themselves.

This leads to the open questions that we aim to examine as part of a larger research project. The first issue we identified was that there is a need to find specific motivators to engage all students in the completion of such projects. These motivators need to look outside of the specific goals of the projects, perhaps elucidating the hidden learning outcomes that are evident after one tackles a semester-long project. The second issue is the ability of the students to sanction group members if these members do not perform up to the requirements of the group. This is a sensitive issue that needs to be examined with care, so as not to alienate the underperforming students towards their group, but also it is one important issue that will empower the students who try to perform up to the standards set by the project requirements. A future research direction could tackle identifying functional modes of peer assessment. Namely, we could compare three student groups during a semester-long project along these outcomes (i.e. least underperforming participants, most empowerment towards the reluctant participants) as we vary the peer assessment mode. One group (control) will be left to their own devices to decide and implement peer assessment, the second will be instructed to follow a semi-controlled protocol and the third will be educated before the project begins on the best ways to choose assessment based on the group dynamics. We predict that educating the students before their group projects starts on optimal ways to interact and self-assess in the group will optimize both their sense of participation and satisfaction with their work, along with the group's rates of performance, overall, and student participation across the continuum.

References

Adderley, K., Ashwin, C., Bradbury, P., Freeman, J., Goodland, S., Greene, J., . . . Wren, O. (1975). *Project methods in higher education*. London: Society for Research into Higher Education.

Blumenfeld, P. C., Soloway, C., Marx, R. W., Krajcik, J. S., Guzdial, M., & Palincsar, A. (1991). Motivating project-based learning: Sustaining the doing, supporting the learning. *Educational Psychologist, 26*(3&4), 369-398.

Christou, G. (2011). *Sanctions, Punishment, and Game Design: Designing MMORPGs for Fair Treatment of Players.* Paper presented at the GAMEON-ARABIA 2011, Amman, Jordan.

de los Ríosam, I., Cazorlaa, A., Díaz-Puentea, J. M., & Yagüea, J. L. (2010). Project–based learning in engineering higher education: two decades of teaching competences in real environments. *Procedia - Social and Behavioral Sciences, 2*(2), 1368-1378.

Frank, M., Lavy, I., & Elata, D. (2003). Implementing the project-based learning approach in an academic engineering course. *International Journal of Technology and Design Education, 13*, 273-288.

Green, A. M. (1998). Project-Based-Learning: Moving Students Toward Meaningful Learning. Retrieved from

Kilpatrick, W. H. (1918). The project method *Teachers College Bulletin*.

Krajcik, J., Czerniak, C., & Berger, C. F. (1999). *Teaching Science: A Project-Based Approach*. New York, NY: McGraw-Hill College.

Krajcik, J. S., Czerniak, C. M., & Berger, C. F. (2003). *Teaching science in elementary and middle school classrooms – a project-based approach* (2nd edition ed.). New York.: McGraw-Hill.

Microsoft. (2013). XBOX 360 + Kinect Retrieved April 11th 2013, from http://www.xbox.com/en-US/kinect

Mills, J. E., & Treagust, D. F. (2003). Engineering Education - Is problem-based or project-based learning the answer? *Australasian Journal of Engineering Education*. Retrieved from http://www.aaee.com.au/journal/2003/mills_treagust03.pdf

Nintendo. (2013). Wii Retrieved April 11th 2013, from http://www.nintendo.com/wii

Sony. (2013). Playstation MOVE Retrieved April 11th, 2013, from http://us.playstation.com/ps3/playstation-move/

Tyler, R. W. (1949). *Basic principles of curriculum and instruction*. Chicago, IL: Univeristy of Chicago.